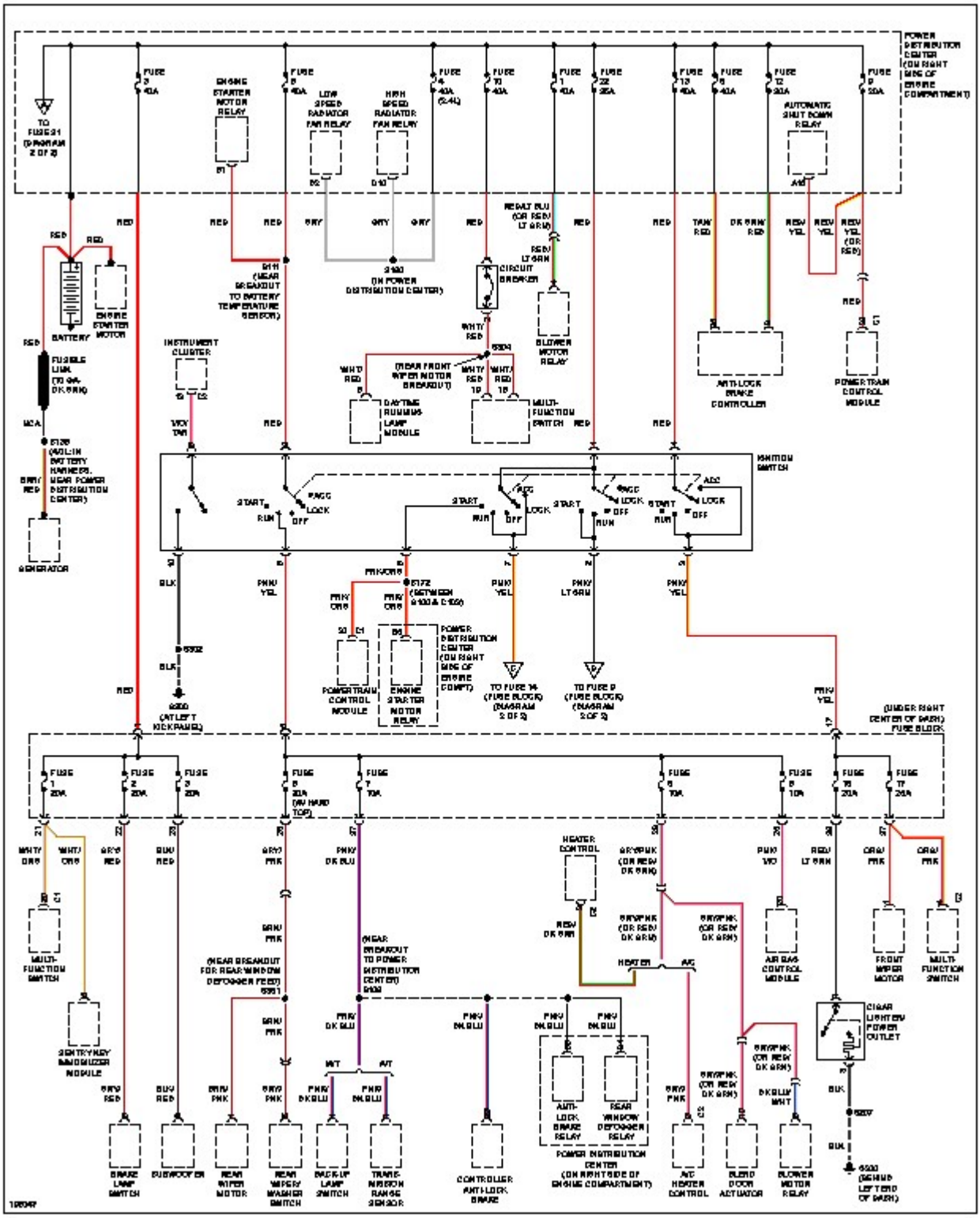
POWER DISTRIBUTION CENTER (ON RIGHT SIDE OF ENGINE COMPARTMENT)
TO FUSE 31 (DIAGRAM 2 OF 2)
FUSE 3 40A
FUSE 5 40A
FUSE 4 40A (2.4L)
FUSE 10 40A
FUSE 1 40A
FUSE 22 25A
FUSE 13 40A
FUSE 6 40A
FUSE 12 20A
FUSE 9 20A
ENGINE STARTER MOTOR RELAY
LOW SPEED RADIATOR FAN RELAY
HIGH SPEED RADIATOR FAN RELAY
AUTOMATIC SHUT DOWN RELAY
RED
GRY
TAN/RED
DK GRN/RED
RED/YEL
RED/YEL (OR RED)
RED/LT BLU (OR RED/LT GRN)
RED/LT GRN
S180 (IN POWER DISTRIBUTION CENTER)
S111 (NEAR BREAKOUT TO BATTERY TEMPERATURE SENSOR)
CIRCUIT BREAKER
BLOWER MOTOR RELAY
BATTERY
ENGINE STARTER MOTOR
FUSIBLE LINK (TO 9A DK GRN)
INSTRUMENT CLUSTER
WHT/RED
S304 (REAR FRONT WIPER MOTOR BREAKOUT)
DAYTIME RUNNING LAMP MODULE
MULTI-FUNCTION SWITCH
ANTI-LOCK BRAKE CONTROLLER
POWERTRAIN CONTROL MODULE
S138 (4.0L IN BATTERY HARNESS, NEAR POWER DISTRIBUTION CENTER)
GENERATOR
IGNITION SWITCH
START
RUN
OFF
LOCK
ACC
BLK
PNK/YEL
PNK/ORG
S172 (BETWEEN S100 & C109)
POWERTRAIN CONTROL MODULE
ENGINE STARTER MOTOR RELAY
TO FUSE 14 (FUSE BLOCK) (DIAGRAM 2 OF 2)
TO FUSE 9 (FUSE BLOCK) (DIAGRAM 2 OF 2)
S302 (AT LEFT KICKPANEL)
(UNDER RIGHT CENTER OF DASH) FUSE BLOCK
FUSE 1 20A
FUSE 2 20A
FUSE 3 20A
FUSE 5 20A (AV HARD TOP)
FUSE 7 10A
FUSE 8 10A
FUSE 16 20A
FUSE 17 20A
WHT/ORG
GRY/RED
BLU/RED
GRY/PNK
PNK/DK BLU
HEATER CONTROL
GRY/PNK (OR RED/DK GRN)
PNK/VIO
RED/LT GRN
ORG/PNK
MULTI-FUNCTION SWITCH
SENTRYKEY IMMOBILIZER MODULE
(NEAR BREAKOUT FOR REAR WINDOW DEFOGGER FEED) S351
(NEAR BREAKOUT TO POWER DISTRIBUTION CENTER) S109
HEATER
A/C
AIR BAG CONTROL MODULE
FRONT WIPER MOTOR
CIGAR LIGHTER/POWER OUTLET
BRN/PNK
PNK/DK BLU
PNK/BN BLU
ANTI-LOCK BRAKE RELAY
REAR WINDOW DEFOGGER RELAY
POWER DISTRIBUTION CENTER (ON RIGHT SIDE OF ENGINE COMPARTMENT)
BRN/PNK
BRN/RED
BLU/RED
BRN/PNK
PNK/DK BLU
PNK/BN BLU
BRN/PNK
BK BLU/WHT
BLK
S207
S200 (BEHIND LEFT END OF DASH)
BRAKE LAMP SWITCH
SUBWOOFER
REAR WIPER MOTOR
REAR WIPER/WASHER SWITCH
BACK-UP LAMP SWITCH
TRANSMISSION RANGE SENSOR
CONTROLLER ANTI-LOCK BRAKE
A/C HEATER CONTROL
BLEND DOOR ACTUATOR
BLOWER MOTOR RELAY