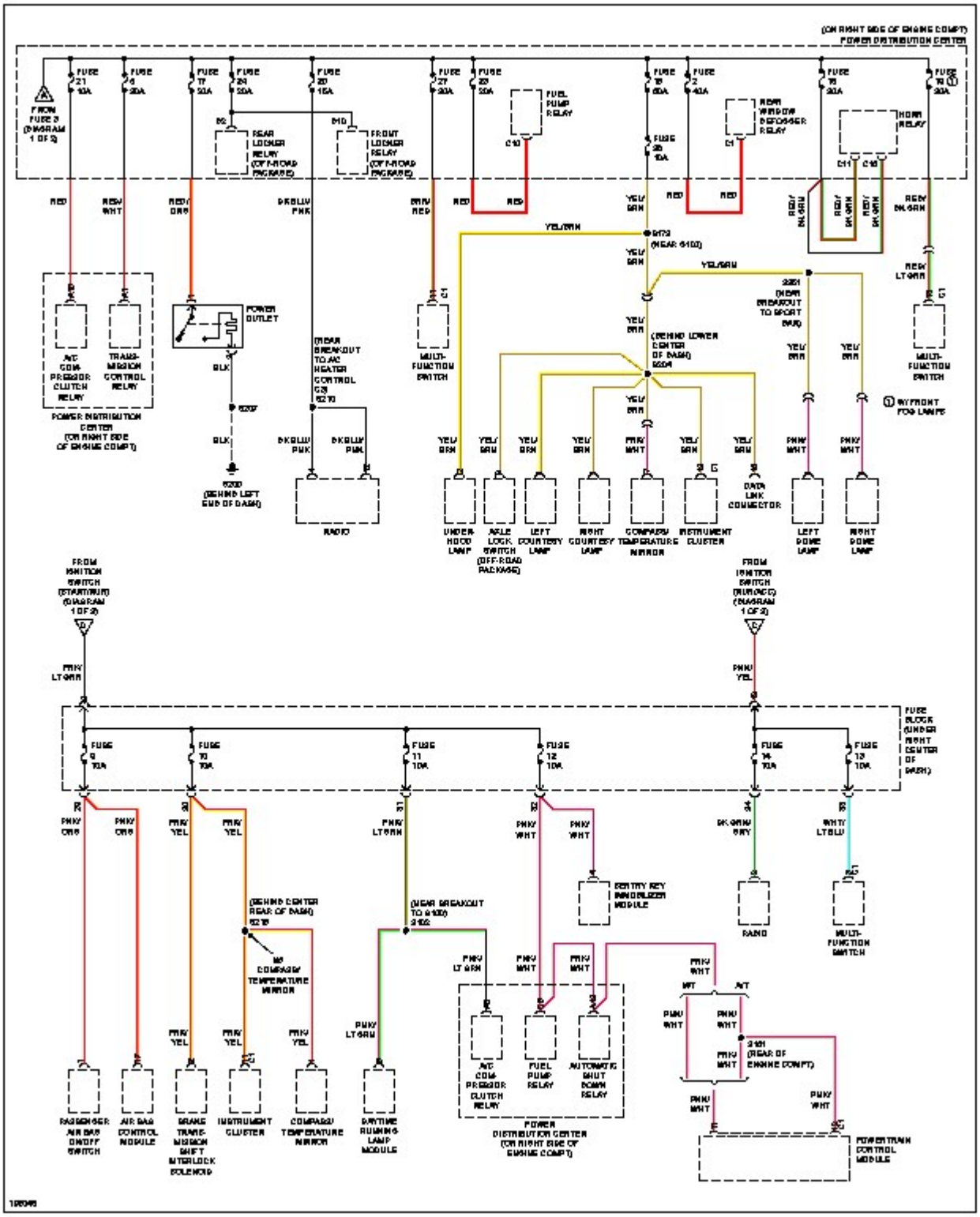

(ON RIGHT SIDE OF ENGINE COMPT)
POWER DISTRIBUTION CENTER
FROM FUSE 3 (DIAGRAM 1 OF 2)
FUSE 21 10A
FUSE 6 20A
FUSE 17 20A
FUSE 24 20A
FUSE 20 15A
FUSE 27 20A
FUSE 23 20A
FUSE 18 20A
FUSE 2 40A
FUSE 16 20A
FUSE 19 20A
REAR LOCKER RELAY (OFF-ROAD PACKAGE)
FRONT LOCKER RELAY (OFF-ROAD PACKAGE)
FUEL PUMP RELAY
REAR WINDOW DEFOGGER RELAY
HORN RELAY
RED
RED/WHT
RED/ORG
BK/BLU/PNK
BRN/RED
YEL/BRN
RED/BK/GRN
RED/LT/GRN
YEL/BRN
(NEAR G100)
YEL/BRN
(NEAR BREAKOUT TO SPORT BAR)
(BEHIND LOWER CENTER OF DASH)
POWER OUTLET
BLK
(NEAR BREAKOUT TO A/C HEATER CONTROL G3)
A/C COM-PRESSOR CLUTCH RELAY
TRANS-MISSION CONTROL RELAY
POWER DISTRIBUTION CENTER (ON RIGHT SIDE OF ENGINE COMPT)
MULTI-FUNCTION SWITCH
MULTI-FUNCTION SWITCH
WY FRONT FOG LAMPS
(BEHIND LEFT END OF DASH)
RADIO
UNDER-HOOD LAMP
AXLE LOCK SWITCH (OFF-ROAD PACKAGE)
LEFT COURTESY LAMP
RIGHT COURTESY LAMP
COMPASS/TEMPERATURE MIRROR
INSTRUMENT CLUSTER
DATA LINK CONNECTOR
LEFT DOME LAMP
RIGHT DOME LAMP
FROM IGNITION SWITCH (START/RUN) (DIAGRAM 1 OF 2)
FROM IGNITION SWITCH (RUN/ACC) (DIAGRAM 1 OF 2)
PNK/LT/GRN
PNK/YEL
FUSE BLOCK (UNDER RIGHT CENTER OF DASH)
FUSE 9 10A
FUSE 10 10A
FUSE 11 10A
FUSE 12 10A
FUSE 14 10A
FUSE 13 10A
PNK/ORG
PNK/YEL
PNK/LT/GRN
PNK/WHT
BK/GRN/GRY
WHT/LT/BLU
SENTRY KEY IMMOBILIZER MODULE
RADIO
MULTI-FUNCTION SWITCH
(BEHIND CENTER REAR OF DASH)
M3 COMPASS/TEMPERATURE MIRROR
(NEAR BREAKOUT TO G100)
PNK/LT/GRN
PNK/WHT
PNK/WHT
PNK/WHT
PNK/WHT
PNK/WHT
PNK/WHT
PNK/WHT
PNK/WHT
PNK/WHT
PNK/WHT
PNK/WHT
PNK/WHT
PNK/WHT
PNK/YEL
PNK/YEL
PNK/YEL
PNK/LT/GRN
A/C COM-PRESSOR CLUTCH RELAY
FUEL PUMP RELAY
AUTOMATIC SHUT DOWN RELAY
POWER DISTRIBUTION CENTER (ON RIGHT SIDE OF ENGINE COMPT)
(REAR OF ENGINE COMPT)
POWERTRAIN CONTROL MODULE
PASSENGER AIR BAG ON/OFF SWITCH
AIR BAG CONTROL MODULE
BRAKE TRANS-MISSION SHIFT INTERLOCK SOLENOID
INSTRUMENT CLUSTER
COMPASS/TEMPERATURE MIRROR
DAYTIME RUNNING LAMP MODULE