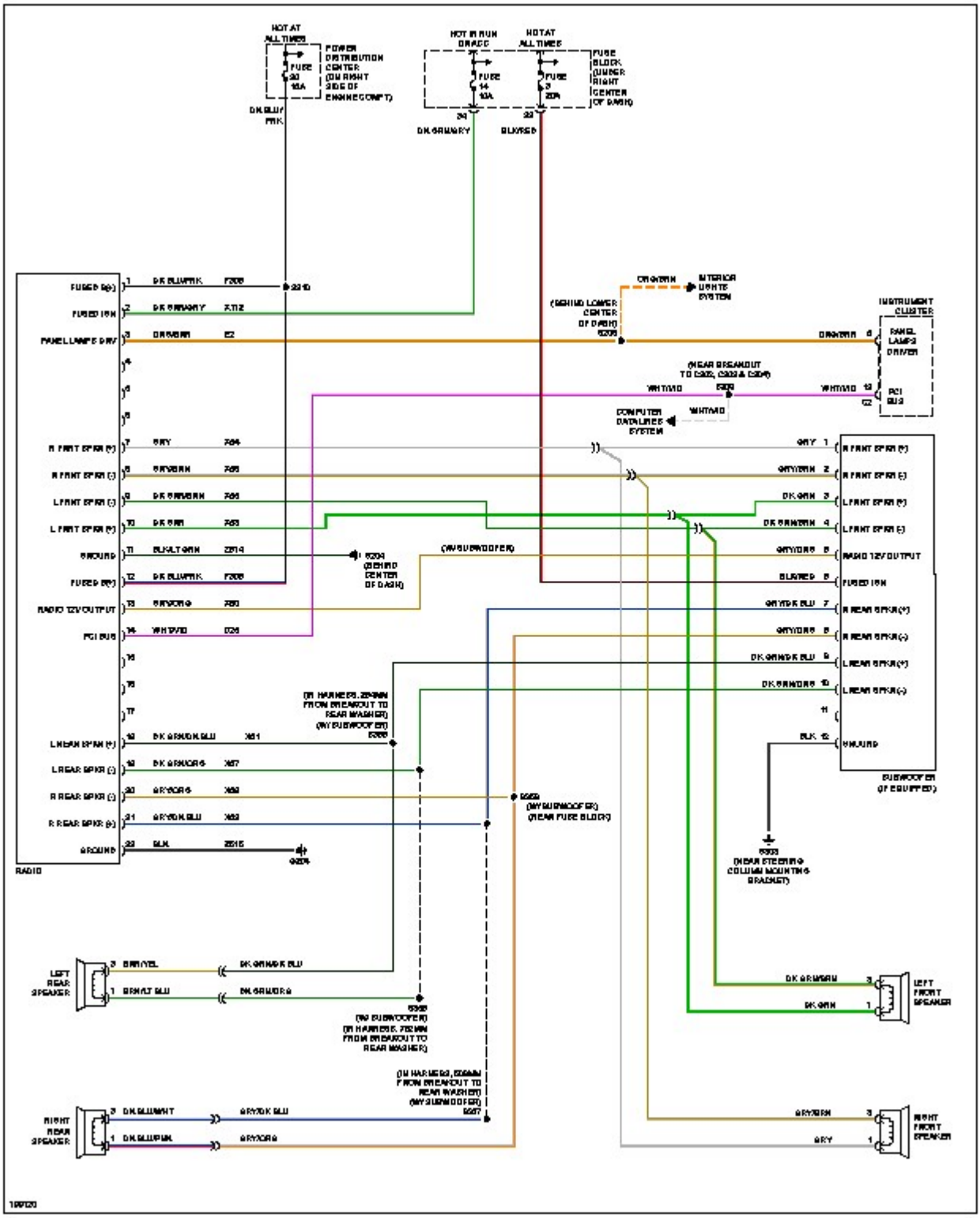
HOT AT ALL TIMES
POWER DISTRIBUTION CENTER (ON RIGHT SIDE OF ENGINE COMPT)
FUSE 30 10A
HOT IN RUN ONLY
FUSE 14 10A
HOT AT ALL TIMES
FUSE 3 20A
FUSE BLOCK (UNDER RIGHT CENTER OF DASH)
DK BLU/PNK
DK GRN/WHT
BLK/RED
FUSED B(+)
FUSED IGN
PANEL LAMPS DRV
R FRONT SPKR (+)
R FRONT SPKR (-)
L FRONT SPKR (-)
L FRONT SPKR (+)
GROUND
FUSED B(+)
RADIO 12V OUTPUT
PCI BUS
L REAR SPKR (+)
L REAR SPKR (-)
R REAR SPKR (-)
R REAR SPKR (+)
GROUND
RADIO
(BEHIND LOWER CENTER OF DASH)
INTERIOR LIGHTS SYSTEM
INSTRUMENT CLUSTER
PANEL LAMPS DRIVER
PCI BUS
(REAR BREAKOUT TO C202, C203 & C204)
COMPUTER DATA LINES SYSTEM
(BEHIND CENTER OF DASH)
(W/ SUBWOOFER)
(W/ SUBWOOFER) (NEAR FUSE BLOCK)
(IN HARNESS, 254MM FROM BREAKOUT TO REAR WASHER) (W/ SUBWOOFER)
(IN HARNESS, 762MM FROM BREAKOUT TO REAR WASHER)
(IN HARNESS, 508MM FROM BREAKOUT TO REAR WASHER) (W/ SUBWOOFER)
R FRONT SPKR (+)
R FRONT SPKR (-)
L FRONT SPKR (-)
L FRONT SPKR (+)
RADIO 12V OUTPUT
FUSED IGN
R REAR SPKR (+)
R REAR SPKR (-)
L REAR SPKR (+)
L REAR SPKR (-)
GROUND
SUBWOOFER (IF EQUIPPED)
(NEAR STEERING COLUMN MOUNTING BRACKET)
LEFT REAR SPEAKER
RIGHT REAR SPEAKER
LEFT FRONT SPEAKER
RIGHT FRONT SPEAKER