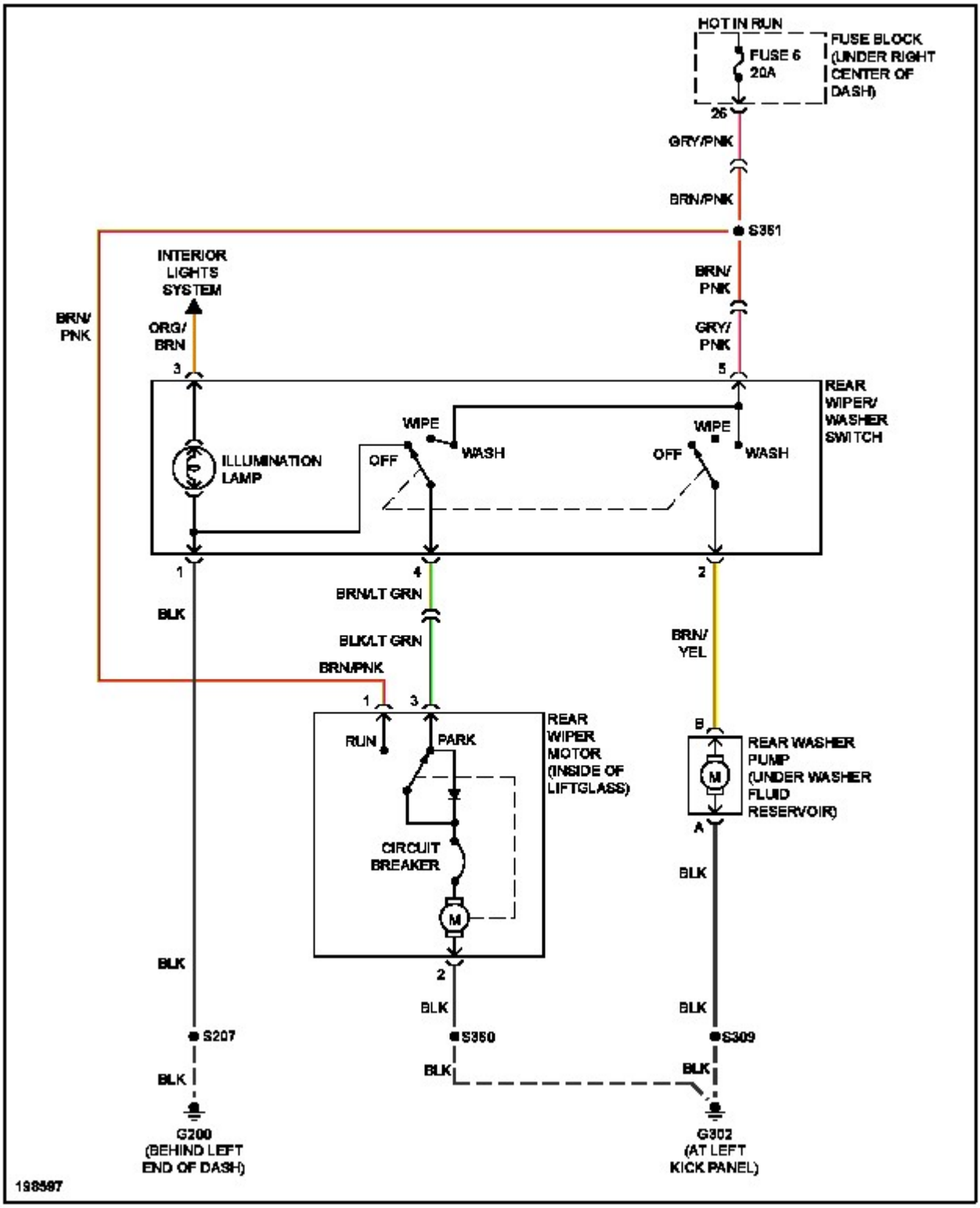
HOT IN RUN
FUSE 6
20A
FUSE BLOCK
(UNDER RIGHT
CENTER OF
DASH)
26
GRY/PNK
BRN/PNK
S351
INTERIOR
LIGHTS
SYSTEM
BRN/
PNK
ORG/
BRN
BRN/
PNK
GRY/
PNK
3
5
REAR
WIPER/
WASHER
SWITCH
WIPE
WASH
OFF
ILLUMINATION
LAMP
WIPE
OFF
WASH
1
4
2
BRN/LT GRN
BLK
BLK/LT GRN
BRN/
YEL
BRN/PNK
1
3
REAR
WIPER
MOTOR
(INSIDE OF
LIFTGLASS)
RUN
PARK
CIRCUIT
BREAKER
M
B
REAR WASHER
PUMP
(UNDER WASHER
FLUID
RESERVOIR)
M
A
BLK
BLK
2
BLK
BLK
S207
S350
S309
BLK
BLK
BLK
G200
(BEHIND LEFT
END OF DASH)
G302
(AT LEFT
KICK PANEL)
198587